TEAR SHEET

Zephyr Large Floor Light

Item # KW 1130AI-L-EU

Designer: Kelly Wearstler

Height: 160cm
Width: 50.8cm
Base: 19cm Round
Finishes: AI
Shade Treatments: L
Shade Details: 43.2cm x 50.8cm x 35.6cm
Socket: 2 - E27 Keyless w/ Line Switch
Wattage: 2 - 60 A
IP Rating: IP20 Class II

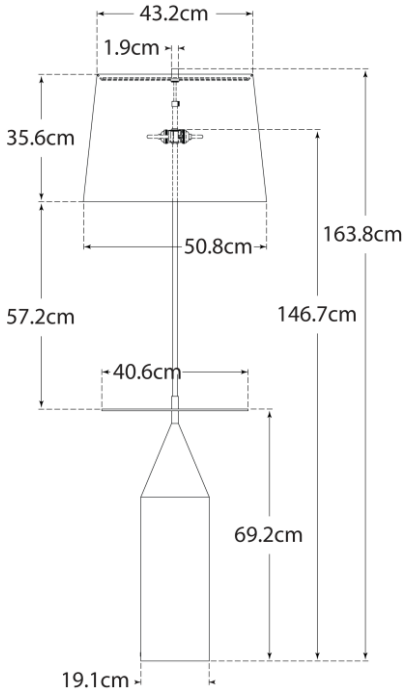

VISUAL COMFORT & CO.