TEAR SHEET

Montreuil Floor Lamp
Item # ARN 1025BSL-L-EU

Designer: AERIN

Height: 170.2cm
Width: 42.5cm
Base: 25.4cm Round
Finishes: BSL, G
Shade Treatments: L
Shade Details: 8.9cm x 15.2cm x 20.3cm
Socket: 4 - E14 Candelabara
Wattage: 4 - 40 B
IP Rating: IP20 Class II

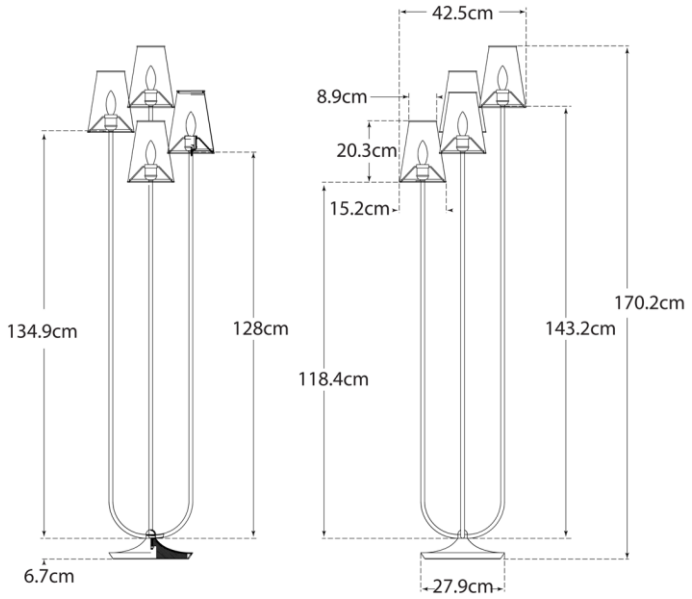

VISUAL COMFORT & CO.