TEAR SHEET

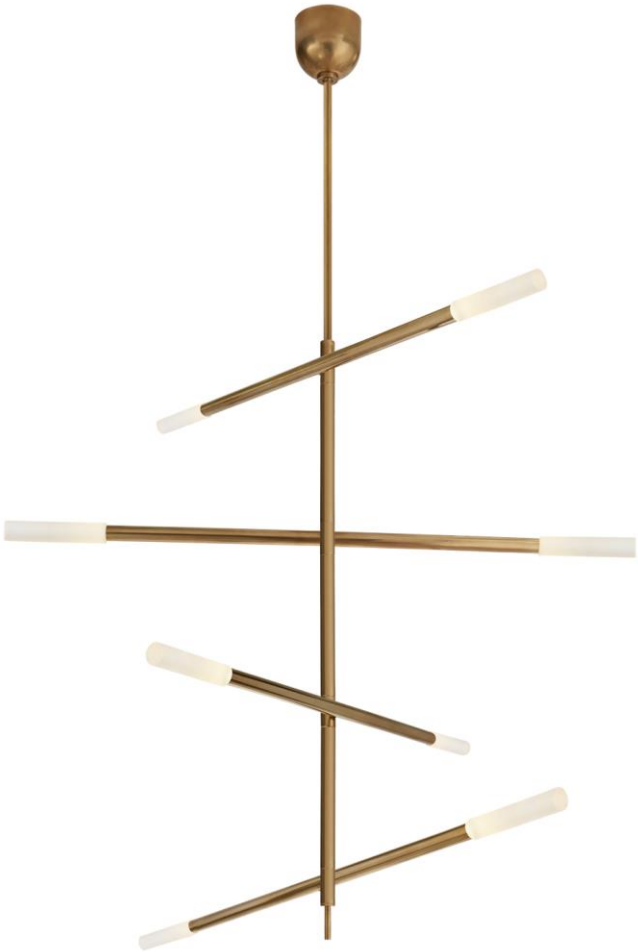

Rousseau Large Articulating Chandelier
Item # KW 5593AB-EC-EU

Designer: Kelly Wearstler

O/A Height: 215.9cm
Fixture Height: 120.6cm
Min. Custom Height: 165.1cm
Width: 7.6cm - 121.9cm
Canopy: 12.7cm Round
Finishes: AB, BZ, PN
Glass Options: EC
Socket: Dedicated LED
Wattage: 35w (4200lm)
IP Rating: IP20 Class II
Note: Custom Height Available

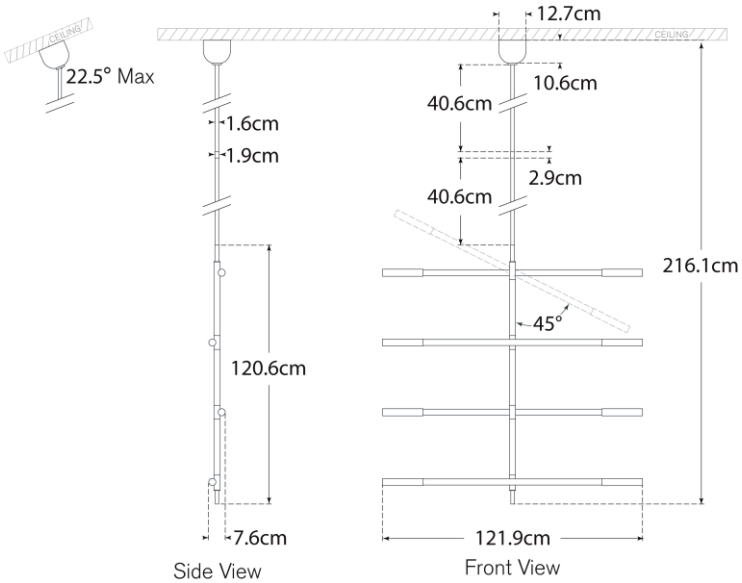

VISUAL COMFORT & CO.