TEAR SHEET

Edie Baluster Sconce

Item # TOB 2741PN-NP-EU

Designer: Thomas O'Brien

Height: 83.2cm
Width: 25.4cm
Extension: 17.8cm
Backplate: 10.2cm Square
Finishes: AN, BZ, BZ/HAB, HAB, PN
Shade Treatments: NP
Shade Details: 22.9cm x 25.4cm x 20.3cm Shield
Socket: 2 - E14 Candelabra
Wattage: 2 - 40 B
IP Rating: IP20 Class I
Note: Requires Smaller Outlet Box

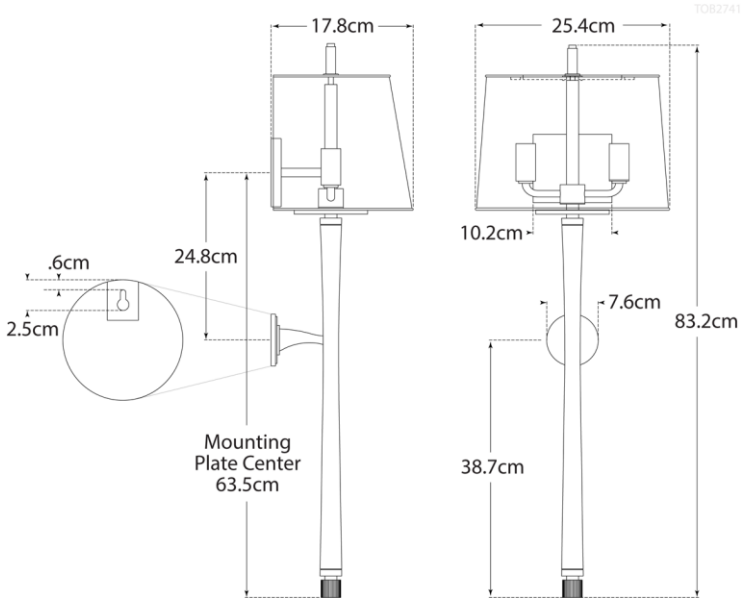

VISUAL COMFORT & CO.